MASTERFLEX®

I/P®

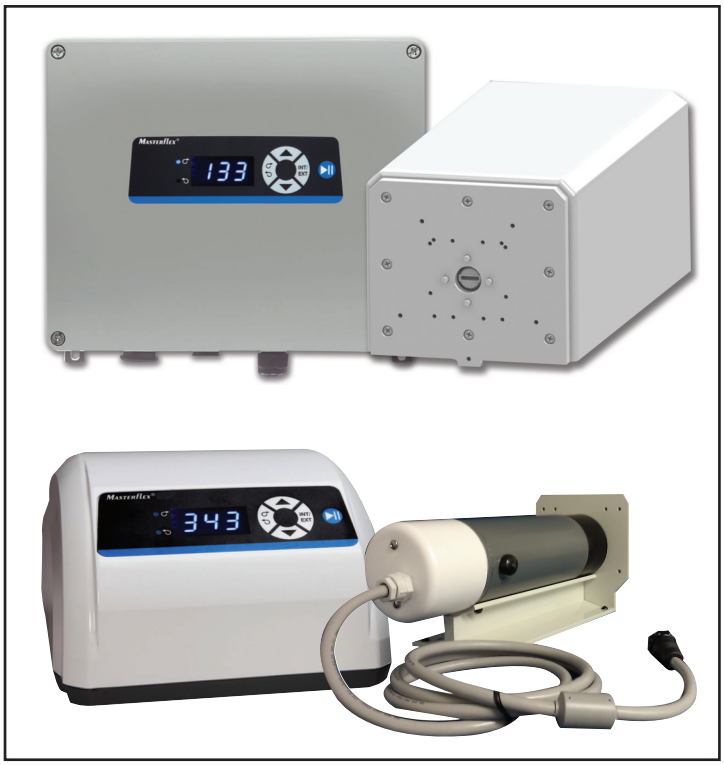

OPERATING MANUAL:

I/P® PRECISION VARIABLE SPEED MODULAR DRIVES

Model Nos.

MFLX07591-20
MFLX07591-30

A-1299-1084B
Edition 05

MASTERFLEX®

(US & Canada only) Toll Free 1-800-MASTERFLEX • 1-800-637-3739
(Outside US & Canada) 1-847-381-7050
masterflex.tech@avantorsciences.com • www.avantorsciences.com/masterflex

© 2023 Masterflex LLC. All rights reserved.
Masterflex – Reg TM Masterflex LLC.
NORPRENE, PHARMED and TYGON – Reg TM Saint-Gobain Performance Plastic Corp.

Trademarks bearing the ® symbol in this publication are registered in the U.S. and in other countries.

PUMP FOR LIQUIDS
ORIGINAL INSTRUCTIONS

SAFETY PRECAUTIONS

DANGER: Remove power from the pump before any cleaning operation is started.

High voltages exist and are accessible. Use extreme caution when servicing internal components.

WARNINGS: Remove power from the pump before attempting any maintenance.

A contactor or other device that routinely disconnects and reapplies the AC line to the drive to start and stop the motor can cause drive hardware damage. The drive is designed to use control input signals that will start and stop the motor.

WARNINGS: Tubing breakage may result in fluid being sprayed from pump. Use appropriate measures to protect operator and equipment.

Turn Pump System off before removing or installing tubing. Fingers or loose clothing could get caught in drive mechanism.

CAUTIONS: When changing flow direction, allow the pump to come to a complete stop before starting again. Failure to do so could cause permanent damage to the motor.

Replace the fuse only with one of the same type and rating. The fuse rating and type are stated on the rear panel.

CAUTION: To avoid electrical shock, the power cord protective grounding conductor must be connected to ground. Not for operation in wet locations as defined by EN61010-1.

If the product is not used in a manner specified in the instructions, the protection provided by the equipment may be impaired.

Explanation of Symbols

CAUTION: Risk of Danger. Consult Operator's manual for nature of hazard and corrective actions.

CAUTION: Risk of crushing. Keep fingers away from rotor while pump is in operation. Stop pump before loading or unloading tubing.

CAUTION: Hot Surface. Do not touch.

CAUTION: Risk of electric shock. Consult Operator's manual for nature of hazard and corrective actions.

WARNING: Product Use Limitation

This product is not designed for, nor intended for use in patient connected applications; including, but not limited to, medical and dental use, and accordingly has not been submitted for FDA approval.

This product is not designed for, nor intended for use in hazardous duty areas as defined by ATEX or the NEC (National Electrical Code); including, but not limited to use with flammable liquids.

Safety

1. Read instructions before operating the unit.

2. Observe safety precautions at all times, especially when pumping dangerous liquids.

3. If the pump runs unusually noisy or if bunching of the tubing in the pump can be observed, make sure the tubing is clamped down tightly and/or replace it with a new piece of tubing.

4. The I/P Precision Variable-Speed Modular Drives must be well-grounded at all times.

5. The I/P Precision Variable-Speed Modular Drives are equipped with a current-limiting circuit that will shut the motor down if any of the following conditions exist:

   a. Tubing that is too hard is loaded in the pump.

   b. Incorrect tubing size or wall thickness is loaded in the pump.

   c. Tubing is improperly loaded into the Pump Head.

6. The unit is fused and grounded to protect the operator in the event of short circuits that could be caused by liquid entering the case.

   ⚠ ***CAUTION: Replace the fuse only with one of the same type and rating. The fuse rating and type are stated on the rear panel.***

7. The I/P Precision Variable-Speed Modular Drives should not be used in outdoor or hazardous locations.

Table of Contents

		Page
Section 1	**INTRODUCTION**	**1-1**
	General Description	1-1
	Application Solutions	1-1
	Controls, Indicators and Connectors	1-2
Section 2	**INSTALLATION AND SETUP**	**2-1**
	Before Starting Drive	2-1
	Mounting the Pump Head	2-1
Section 3	**OPERATION**	**3-1**
	Inserting Tubing	3-1
	Tubing Inspection and Replacement	3-1
	Pump Controls	3-1
	Keypad Lockout Enable/Disable	3-2
	External Operation	3-2
	External Inputs	3-3
	Transmitter Type	3-4
Section 4	**MAINTENANCE**	**4-1**
	Replacement Parts	4-1
	Fuse Replacement	4-2
	Motor Brush Replacement	4-3
	Cleaning	4-3
Section 5	**TROUBLESHOOTING**	**5-1**
	Troubleshooting Chart	5-1
Section 6	**ACCESSORIES**	**6-1**
	Accessories	6-1
Section 7	**SPECIFICATIONS**	**7-1**
Section 8	**WARRANTY, PRODUCT RETURN and TECHNICAL ASSISTANCE**	**8-1**
	Warranty	8-1
	Product Return	8-2
	Technical Assistance	8-2

Figures

Page

Controls, Indicators and Connectors 1-2
DB-9 and NEMA 4X Pin Configuration with Wiring Scheme 3-2
Typical 4-20 mA Wiring 3-4
Fuse Replacement 4-2
Motor Brush Replacement 4-3

Section 1 Introduction

General Description

The I/P Precision Variable-Speed Modular Drives control the speed of MASTERFLEX® Pump Heads to provide flow rates from 0.04 to 19 L/min.

The 650 rpm I/P Precision Variable-Speed Modular Drives can mount up to two (2) MASTERFLEX Pump Heads up to rated torque or other pumps adapted to MASTERFLEX drives.

Application Solutions

Advantages of Peristaltic Pumps:

- Handle abrasive slurries and corrosive fluids with minimal wear. Ideal for titanium dioxide or diatomaceous earth filter aid applications.
- Low maintenance; sealless and valveless design.
- Valveless design prevents clogging.
- Inner surfaces are smooth and easy to clean.
- Contamination free; fluid contacts only the tubing or tube material.
- Suction lift and priming up to 8.8m water column at sea level.
- Low shearing for handling the most shear sensitive of fluids such as latex or fire fighting foam.
- Capable of running dry and pumping fluids with high quantities of entrained air, such as black liquor soap.
- High volumetric efficiency allows operation in metering or dosing applications where high accuracy is required.
- Handles extremely viscous fluids.
- Availability of tubing and tube materials that are suitable for food and pharmaceutical use.

Controls, Indicators and Connectors

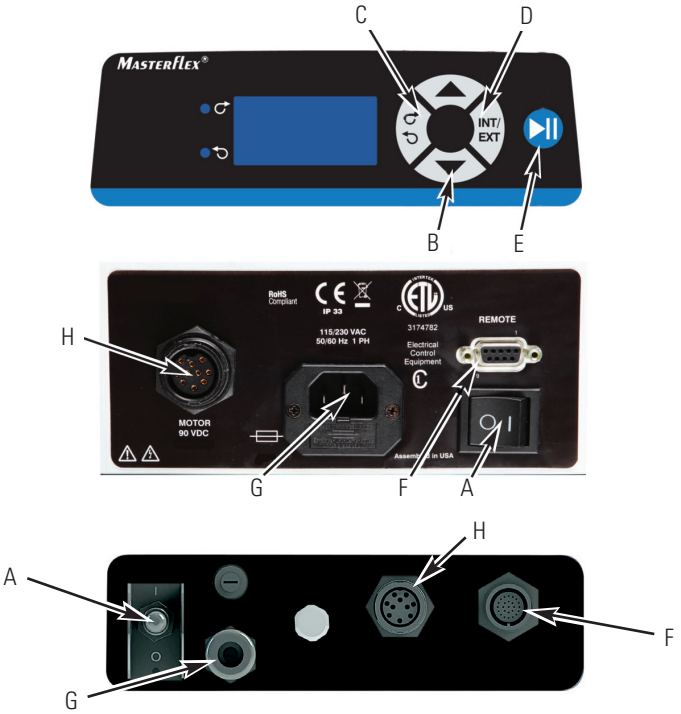

Figure 1-1. Controls, Indicators and Connectors

A. POWER (ON/OFF) SWITCH: Turns the unit ON or OFF.

B. SPEED KEYS: Sets the speed of the pump. The higher the number, the faster the speed of the pump. When the speed key is depressed the smallest speed units change first followed by an increasing rate of change.

C. FLOW DIRECTION KEY: Sets the direction of pump rotation Clockwise/Counterclockwise. An LED annunciator indicates the active direction. The motor is brought to a controlled stop before reversing direction.

D. INTERNAL/EXTERNAL KEY: Changes the drive operation mode. Internal (Local) operation from the front panel keypad is designated by INT, external (Remote) operation is designated by EXT. In INT mode, START/STOP, FLOW DIRECTION, and SPEED keys on the front panel determine operating state. Depression and release of keys enables toggling between the two operating states.

E. START/STOP KEY: Upon depression, key toggles the motor ON/OFF during INT mode. This key will not start the drive if in EXT mode. If pressed while operating in EXT mode (stop desired), the button will always stop the drive and a toggle of the EXT Start/Stop is required to restart the drive.

F. REMOTE CONNECTOR: Utilized to connect wiring for remote control operation with a DB-9 (Round 18 pin for NEMA 4X) connector.

G. IEC Power Entry Module/Line Cord: Utilized to connect line cord to controller. See *page 4-1* for alternative cords.

H. Motor Connector: Utilized to connect motor to controller.

Section 2 Installation and Setup

Before Starting Drive

- The drive should be mounted on a flat horizontal surface. Up to a maximum of two (2) Pump Heads can be added for 650 rpm drives.
- The ambient air temperature should not exceed 104° F (40° C) and adequate air flow should be provided for.
- The drives are provided with a grounded plug. If used in a GFCI protected circuit, nuisance tripping may occur.
- Tubing should be clean and routed so that bend radii are at a minimum four (4) times the tube diameter and as short as possible.

WARNING: Turn drive off before removing or installing tubing. Fingers or loose clothing could get caught in drive mechanism.

- Use a tube size of appropriate diameter for the flow rate and viscosity required.
- For tubing selection and compatibility, see *Tubing Selection Guide* within this flash drive or on the web.
- For Pump Head information, see *Pump Head* datasheets within this flash drive or on the web.
- Before cleaning or conducting maintenance on unit remove power from the drive.

DANGER: High voltages exist and are accessible. Use extreme caution when servicing internal components.

Mounting the Pump Head

Mount Pump Head and load tubing (See *Pump Head* datasheets within this flash drive or on the web). Check to ensure that rollers are clean and free of defects.

Section 3 Operation

Inserting Tubing

WARNINGS: Tubing breakage may result in fluid being sprayed from pump. Use appropriate measures to protect operator and equipment.

Turn Pump System off before removing or installing tubing. Fingers or loose clothing could be caught in the pump mechanism.

CAUTION: To avoid electrical shock, the power cord protective grounding conductor must be connected to ground. Not for operation in wet locations as defined by EN61010-1.

If the product is not used in a manner specified in the instructions, the protection provided by the equipment may be impaired.

Tubing Inspection and Replacement

Tubing should be inspected periodically for tears, cracks, cut marks, abrasions, inability to hold pressure, bubbles in the flow stream and reduction or loss of flow.

Tubing life may be extended by periodically moving the worn tubing inside the occlusion bed of the pump to the outside of the occlusion bed to the suction side of the pump. This will avoid excessive tubing wear at any specific point.

Always move the worn tubing to the suction side of the pump.

Pump Controls

CAUTION: When changing flow direction, allow the pump to come to a complete stop before starting again. Failure to do so could cause permanent damage to the motor.

1. Make sure the speed is set to the minimum setting.
2. Turn the power switch ON. Increase the speed to start the pump action. The higher the rpm setting, the faster the speed of the pump.
3. The I/P Precision Variable-Speed Modular Drives are self-priming. To begin pumping, select a flow direction with the flow direction button, insert the intake and output tubing into a reservoir, and turn the unit ON. Prime the tubing for at least 5 minutes. If accurate flow control is important, allow the pump to prime for approximately 20 minutes for more stable flow conditions.

NOTE: When in INTernal mode, pump will start automatically after brownout, powerout or if drive was turned off using the power switch while pump was running.

Keypad Lockout Enable/Disable

Press and hold the INT/EXT key. After five (5) seconds, display will change to all dashes. Release INT/EXT key and press UP ARROW key (▲) five (5) times. Repeat this process to unlock the keypad. When the keypad is locked out, display will change to display all dashes (- - - - -) when a key is depressed.

External Operation

Bench top models are equipped with inputs that can be controlled by external signals connected at the rear panel 9-pin "D" shell connector. NEMA 4X models are controlled at the bottom18-pin round connector. The external inputs permit control of the pump by remote equipment or accessories. Figure 3-1 indicates the signal locations in the connector.

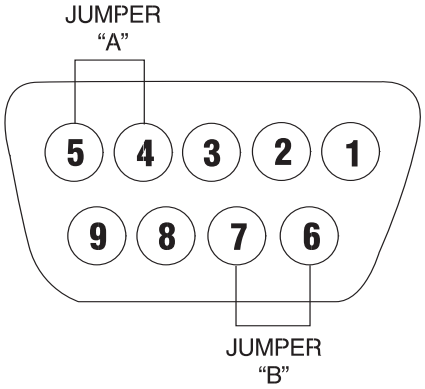

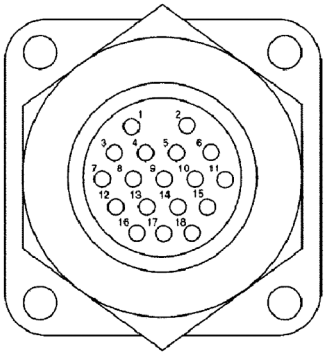

Note: Jumpers "A" and "B" are optional. See *page 3-3 External Inputs* for correct usage.

DB-9 Pin No.	Description	NEMA 4X Pin No.
1	Speed Control Voltage Input (0–10V) (+) input	1 (black)
2	Speed Control Current Input (4–20 mA) (+) input	3 (white)
3	Speed Control Input Reference Common	5 (orange)
4	Local/Remote Speed Control	14 (red/yellow)
5	Local/Remote Speed Control Reference	10 (grey)
6	Start/Stop and CW/CCW Reference	8 (yellow)
7	Start/Stop (+) Control	4 (green)
8	CW/CCW	6 (blue)
9	Chassis (Earth) Ground	9 (violet)

NOTE: Colors for NEMA 4X are those of the Remote Cable, Cat. number MN-77300-32.

Figure 3-1. DB-9 and NEMA 4X Pin Configuration with Wiring Scheme

External Inputs

The front INT/EXT key enables external functions. Switching to INT on the display disables the external functions, allowing the front panel controls to operate the pump.

When the INT/EXT key is in the EXT position, starting and stopping the pump is controlled by an external contact closure between pins 6 and 7 (Jumper B) (pins 4 and 8 for NEMA 4X models), and the pump speed is determined by an externally supplied 0–10V or 4–20 mA source. Connection must be made between pins 6 and 7 (pins 4 and 8 for NEMA 4X models) to Start/Stop the drive and a control voltage greater than 0V between pins 1 and 3 (pins 1 and 5 for NEMA 4X models) or a control current greater than 4 mA between pins 2 and 3 (pins 3 and 5 for NEMA 4X models) must be applied for the pump to run.

If setting the speed from the front panel is desired with external Start/Stop contact operation, the INT/EXT key must again be in the EXT position. In addition, Jumper A should be in place. Jumper A connects pin 4 (pin 14 for NEMA 4X models) of the "D" shell connector (Local/Remote) to pin 5 (pin 10 for NEMA 4X models) (Local/Remote Reference). Start/Stop will then be controlled from the rear panel (Jumper B), and the pump speed will be controlled from the front panel.

NOTE: The signal common for the speed control voltage and current inputs is not referenced to earth ground.

The START/STOP, CW/CCW and Local/Remote are digital inputs. They are internally pulled up to +5 V with respect to earth ground via pins 5 and 6 (pins 8 and 10 for NEMA 4X models). They can alternately be driven with open collector logic. For increased noise immunity, use of contact closures is recommended.

WARNING: A contactor or other device that routinely disconnects and reapplies the AC line to the drive to start and stop the motor can cause drive hardware damage. The drive is designed to use control input signals that will start and stop the motor.

Transmitter Type

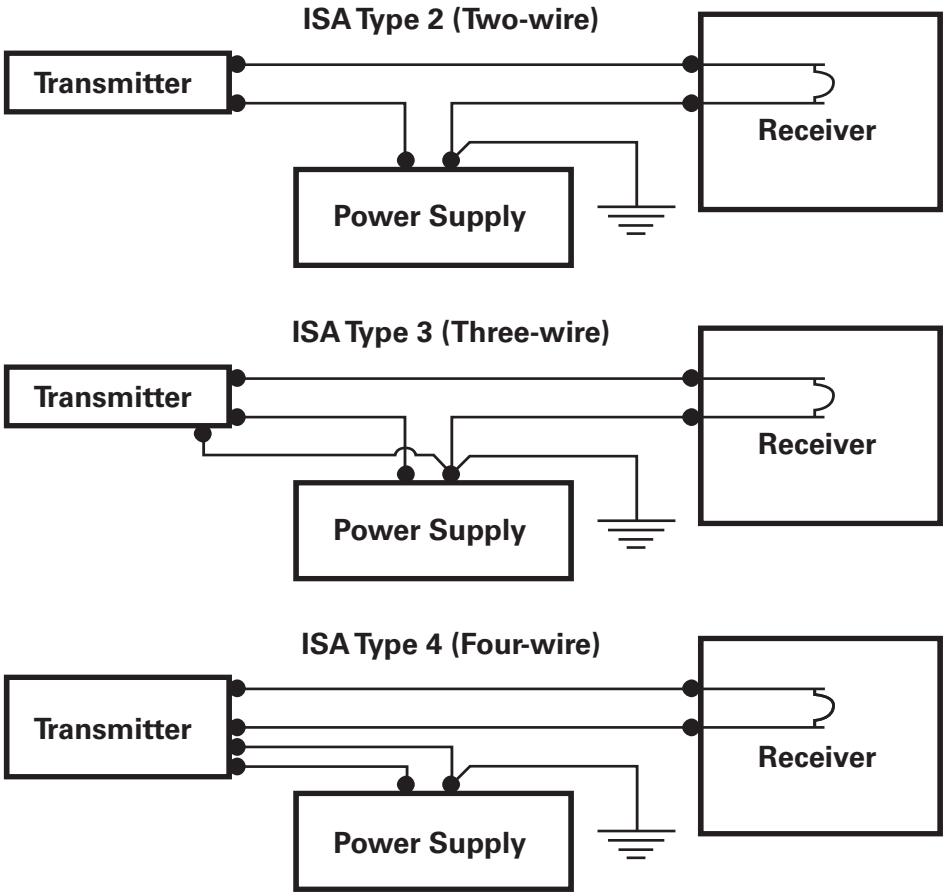

Figure 3-2. Typical 4-20 mA wiring

Section 4 Maintenance

Replacement Parts

WARNING: Remove power from the pump before attempting any maintenance.

Description	Part Number
Brushes (set of 2)	07520-04
Brush Cap Holder	07520-03
Fuse-T6.3A, 5 x 20 mm	77500-24
Line Cord, Australia	50001-60
Line Cord, Denmark	50001-62
Line Cord, India	50001-64
Line Cord (115V), United States	50001-68
Line Cord, Israel	50001-69
Line Cord, Europe	50001-70
Line Cord, England	50001-72
Line Cord, Switzerland	50001-74
Line Cord, Italy	50001-76
Line Cord (230V), United States	50001-78

Fuse Replacement

1. Place the power switch in the off position.
2. Disconnect the AC power input line cord from the receptacle.
3. Remove and check the fuse and replace if defective.

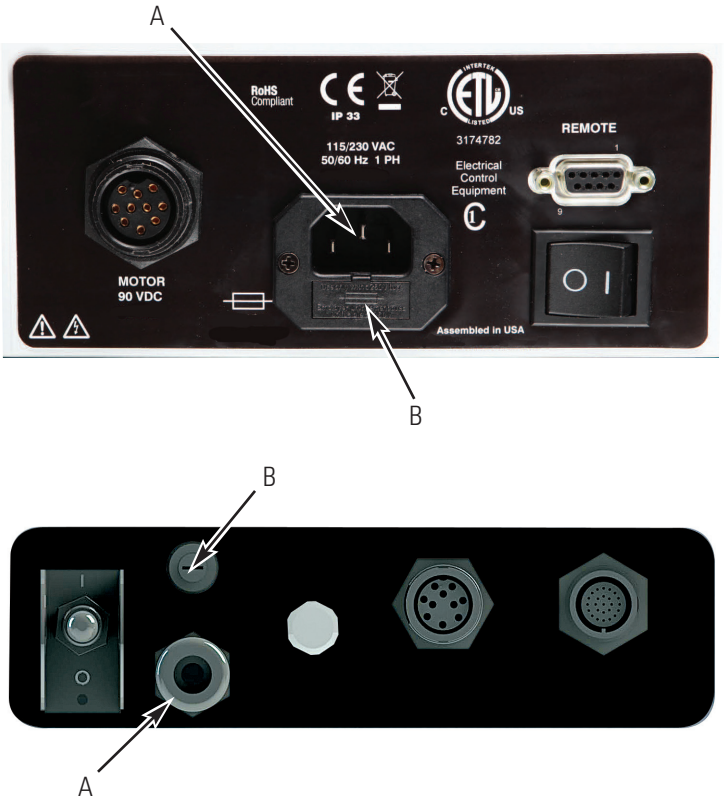

Figure 4-1. Fuse Replacement

Item	Description
A	IEC Power Entry Module / Line Cord
B	T6.3A (5 × 20 mm) Fuse – Do Not Substitute

Motor Brush Replacement

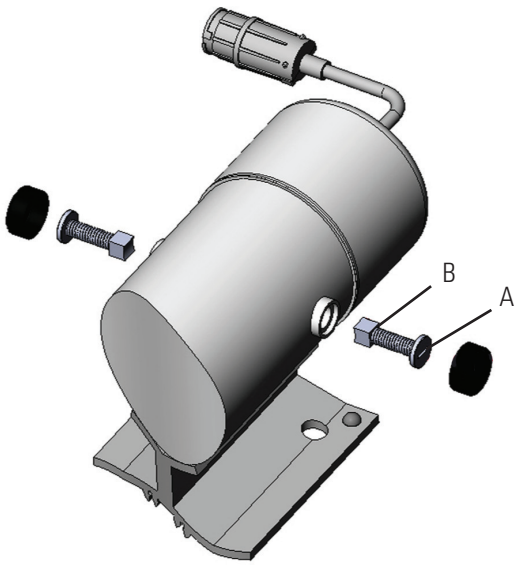

A. Brush Cap
B. Motor Brush (set of two included in 07520-04)

Figure 4-2. Motor Brush Replacement

NOTE: Brushes should be checked every 6 months or 2,000 operating hours.

1. Disconnect AC line cord from the AC receptacle.
2. Disconnect motor cable from the controller.
3. Remove the two vinyl caps covering the brush caps (A see Figure 4-2) then carefully unscrew the brush caps on opposite sides of the motor. Withdraw the brushes (B see Figure 4-2) and examine them for wear.

NOTE: Replace both brushes if either brush is less than 0.300” (7.6mm) long from base to point.

4. Screw brush caps (B see Figure 4-2) in brush holder on each side of motor and replace vinyl caps.
5. Connect motor to controller.
6. Connect AC line cord to AC receptacle.

Cleaning

DANGER: Remove power from the pump before any cleaning operation is started.

Keep the drive enclosure clean with mild detergents. Do not immerse or use excessive fluid when cleaning.

Section 5 Troubleshooting

Troubleshooting Chart

Symptom	Remedy
Unit will not turn on	If the unit is plugged into a GFCI protected circuit verify that the circuit has not been tripped or reset the circuit.
	Verify that the unit is plugged into a functioning outlet.
	Verify that the power cord is firmly attached to the unit.
	Verify that the fuse for the incoming voltage is not blown (located in the slot next to the power cord).
	Verify the motor is properly connected to the controller.
Unit will turn on but pump will not spin	Check the tubing. Tubing should be snug, but not tight, against the rollers.
	Verify that the mode EXT/INT is set correctly.
Error XX is displayed on the screen	Err's 3 & 10, check pump for obstructions, all other Errs return unit for repair.
Unit will turn on but display would dim and pump will not spin	Verify that the incoming voltage meets the required minimum of 90Vrms.
Unit vibrates excessively when pump is running	Check that the tubing was loaded properly.

Section 6 Accessories

Accessories

Model 07591-20 only

1. Footswitch w/DB-9 male	77595-35
2. Handheld Remote Controller	07528-80
3. DB-9 Remote Control Connector	07595-45
4. DB-9 Remote control cable, 25 FT.	07595-47
5. Motor extension cable, 9 FT.	07557-51

Model 07591-30 only

1. Washdown Footswitch	07595-43
2. Washdown Remote control cable, 25 FT.	77300-32
3. Motor extension cable, 9 FT.	07557-51

Section 7 Specifications

Output:	
Speed:	
07591-20, -30	6-650 rpm
Torque, Maximum:	
Starting:	900 oz-in (64.8 kg-cm)
Running:	300 oz-in (21.6 kg-cm)
Input:	
Operating Voltage/Frequency:	90-260Vrms, 50/60 Hz, 4.4A @ 115Vrms, 2.2A @ 230 Vrms
External Inputs:	
START/STOP, CW/CCW, Remote/Local Speed Control	Contact closure
Voltage input	0–10V DC @ 10 kohm,
Accuracy:	±0.5% Full Scale
Current input	4–20 mA @ 250 ohm,
Accuracy:	±0.5% Full Scale
Environment:	
Operating Temperature:	32 to 104°F (0 to 40°C)
Storage Temperature:	-13 to 149°F (-25 to 65°C)
Humidity:	10% to 90% non-condensing
Altitude:	Less than 6562 ft (2000 m)
Pollution Degree:	
07591-20	Pollution degree 2 (indoor use–lab, office)
07591-30	Pollution degree 3 (Indoor use-sheltered locations)
Noise Level:	<70 dBA @ 1 meter with Pump Head

Construction:

Dimensions (L × W × H):	
07591-20	
Controller:	10 1/2" × 8 1/4" × 5" (267 × 209.5 × 127mm)
Motor:	15 1/8" × 5 9/16" × 6" (384 × 141 × 152mm)
07591-30	
Controller:	10 1/2" × 11" × 4 1/2" (267 × 279 × 114mm)
Motor:	15 9/16" × 7" × 6" (395 × 178 × 152mm)
Weight:	
07591-20	
Controller:	6.8 lbs (3.08kg)
Motor:	15 lbs (6.8kg)
07591-30	
Controller:	9.46 lbs (4.29kg)
Motor:	30.26 lbs (13.72 kg)
Color:	Light Grey (5% Black)
Material:	
07591-20	Aluminum, ABS plastic and vinyl
07591-30	Powder coated aluminum and steel
Enclosure Rating:	
07591-20	IP33 per IEC-60529
07591-30	IP66 (NEMA 4X) per IEC-60529

Compliance:

UL 61010-1, CAN/CSA-C22.2 No. 61010-1
This product has been tested to the requirements of CAN/CSA-C22.2 No. 61010-1, second edition, including Amendment 1, or a later version of the same standard incorporating the same level of testing requirements.
(For CE Mark):
EN61010-1: (EU Low Voltage Directive) and
EN61326: (EU EMC Directive)

Section 8 Warranty, Product Return and Technical Assistance

Warranty

Use only MASTERFLEX precision tubing with MASTERFLEX pumps to ensure optimum performance. Use of other tubing may void applicable warranties.

This product is warranted against defects in material or workmanship, and at the option of the manufacturer or distributor, any defective product will be repaired or replaced at no charge, or the purchase price will be refunded to the purchaser, provided that: (a) the warranty claim is made in writing within the period of time specified on the warranty card, (b) proof of purchase by bill of sale or receipted invoice is submitted concurrently with the claim and shows that the product is within the applicable warranty period, and (c) the purchaser complies with procedures for returns set forth in the general terms and conditions contained in the manufacturer's or distributor's most recent catalog.

This warranty shall not apply to: (a) defects or damage resulting from: (i) misuse of the product, (ii) use of the product in other than its normal and customary manner, (iii) accident or neglect, (iv) improper testing, operation, maintenance, service, repair, installation, or storage, (v) unauthorized alteration or modification, or (b) post-expiration dated materials.

THIS WARRANTY IS THE EXCLUSIVE REMEDY OF THE PURCHASER, AND THE MANUFACTURER AND DISTRIBUTOR DISCLAIM ALL OTHER WARRANTIES, WHETHER EXPRESS, IMPLIED, OR STATUTORY, INCLUDING WITHOUT LIMITATION, WARRANTIES OF MERCHANTABILITY AND FITNESS FOR A PARTICULAR PURPOSE. NO EMPLOYEE, AGENT, OR REPRESENTATIVE OF THE MANUFACTURER OR DISTRIBUTOR IS AUTHORIZED TO BIND THE MANUFACTURER OR DISTRIBUTOR TO ANY OTHER WARRANTY. IN NO EVENT SHALL THE MANUFACTURER OR DISTRIBUTOR BE LIABLE FOR INCIDENTAL, INDIRECT, SPECIAL OR CONSEQUENTIAL DAMAGES.

The warranty period for this product is two (2) years from date of purchase.

Product Return

To limit charges and delays, contact the Manufacturer or authorized seller for authorization and shipping instructions before returning the product, either within or outside of the warranty period. When returning the product, please state the reason for the return. For your protection, pack the product carefully and insure it against possible damage or loss. Any damages resulting from improper packaging are your responsibility.

Technical Assistance

If you have any questions about the use of this product, contact the Manufacturer or authorized seller.

US & Canada only
Toll Free 1-800-MASTERFLEX | 1-800-637-3739
1-847-381-7050

***EN809 manufactured by:**
Masterflex LLC.
28092 W Commercial Avenue, Barrington, IL 60010
masterflex.tech@avantorsciences.com
www.avantorsciences.com\masterflex