avantor ScienceCentral™ | ORDER ON avantorsciences.com

erlab
You can breathe.

Product datasheet
Captair 714

Ductless filtering fume hood

Safer to operate

- Erlab's advanced carbon filtration technology and/or HEPA/ULPA accommodates your specific needs
- Meets AFNOR NF X 15 211/ANSI Z9.5-2012 filtration efficiency standard (class 1 and 2)
- Sensors that detect filter breakthrough of solvents, acids or formaldehyde
- Safety back up filter in case of main filter saturation
- Continuous monitoring of Air face velocity
- Erlab Safety Program: application analysis and validation, usage certification, filter change reminders

Simpler to use

With Smart Technology, you can easily see that the hood is operating safely. Should the light pulse you are notified that:

- Containment has been compromised or,
- The filter has breakthrough or,
- There is a Fan failure

Flexibility

- The configurable filtration column will accommodate application changes
- No ductwork needed. This allows you to move the hood anywhere.

Savings

- No ductwork cost
- Annual energy costs decreases significantly
- Energy savings outweigh filter replacement costs.

Environment

- No dangerous chemical released into the atmosphere
- Low energy consumption

You get the highest level of filtration performances

Smart Technology guided communication

FILTRATION TECHNOLOGY
erlab Above

erlab
You can breathe.

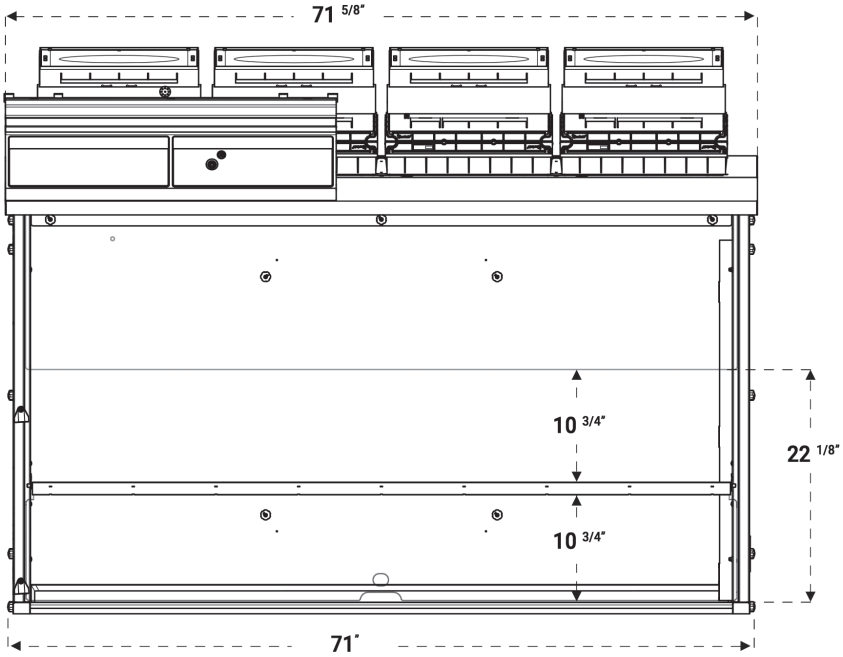

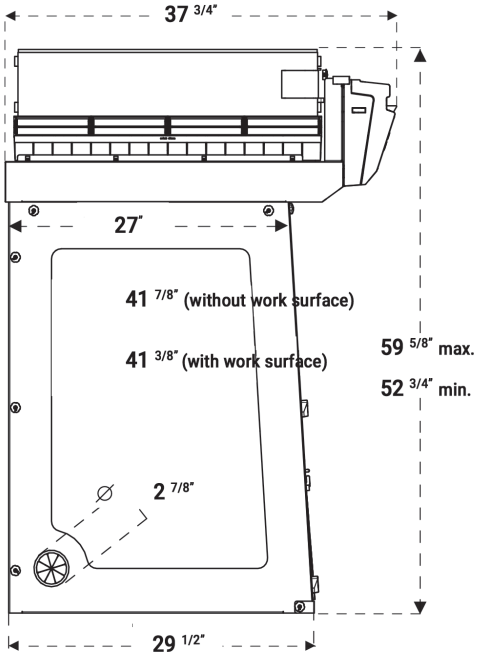

Heights according to the filtration column configuration		
Type 1C or 1P	52 3/4"	Please add 5 3/4" between the last filter and the ceiling to allow a good air recirculation and to replace filters easily
Type 2C or 1P1C or 1C1P	56 1/2"	
Type 1P2C or 1P1C1P	59 5/8	

Work surfaces with built in spill tray

Tempered glass. Retention volume (12L)

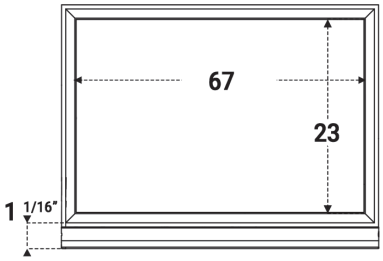

TRESPA® TOPLAB^PLUS Retention volume (11L)

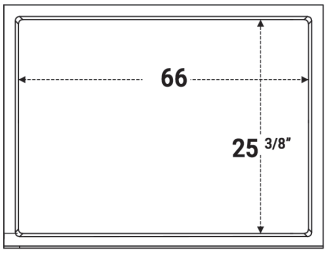

304 L stainless steel Retention volume (27L)

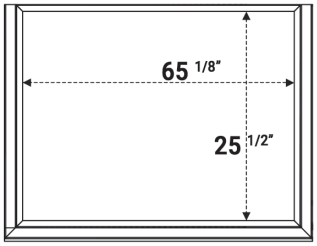

Benchcap: fixed work bench

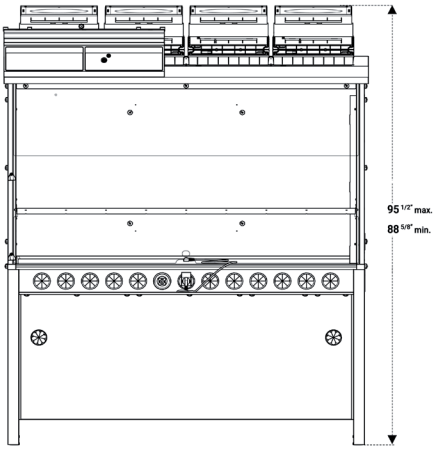

Captair 714

Ductless Filtering Fume Hoods

Avantor Cat.#75784-636

FILTRATION TECHNOLOGY
erlab Above

Designed with you in mind: Our filtration column can be configured for your specific application requirements.

Customized filtration column	Products handled / Applications			
	Liquid chemicals handlings	Powders handlings	Liquid chemicals and powders handlings	Liquid chemicals handlings in clean room
Class I according to the NF X 15-211	Maximum protection 2C	NA	Maximum protection 1P2C	Maximum protection 2C1P
Class 2 according to the NF X 15-211	1C	1P	1P1C	1C1P

Available filters :

C

Carbon filtration for gases and vapours

AS:For organic vapours
BE+:Polyvalent for acid + organic vapours
F:For formaldehyde vapours
K:For ammonia vapours

P

Particulate filtration for powders

HEPA H14:99.995 % efficiency filtration of particles over 0.1 µm in size

ULPA U17:99.999995 % efficiency filtration of particles over 0.1 µm in size

Ventilation

Molecode
Automatic alarm to detect a filtration fault

Safety Standards	AFNOR NF X 15-211:2009: France - BS 7989: England DIN 12 927:Germany - EN 1822:1998 (HEPA H14 & ULPA U17 Filters) - CE Marking
Air Flow	880 m3/h - 518 CFM
Air Face Velocity	0.4 to 0.6 m/s - 79 fpm to 118 fpm
Voltage/Fequency	90-220 V / 50-60 Hz
Power consumption	220 W
Sash openings	Reverso sash
Structure	Corrosion resistant electro-galvanized steel coated with anti-acid polymer
Side and front panels	Chemical resistant acrylic
Filtration module	Polypropylene

Equipment

Communication interface	Simple communication by audible and light pulses: unit running time, air face velocity, automatic alarm to detect a filtration fault, fan failure alarm
Filtration technology	4 columns that can be configured to handle liquids, powders, or both
Carbon filtration for gases and vapours	Following filtration column configuration (see table above)
Particulate filtration for powders	Following filtration column configuration (see table above)
Internal lighting	LED lighting > 650 Lux
Anemometer	Air face velocity alarm
Chemical Listing	List of approved chemicals

Accessories

Work Surfaces	Tempered glass / Trespa® Top LAB^{PLUS} / 304 L stainless steel
Molecode	Detection sensor for : Type S, for solvents / Type A, for acids / Type F, for formaldehydes
Benches	Fixed (Benchcap)
Particulate Pre-filter	Protects the main filter(s) from dust
Transparent Back Panel	Clear acrylic panel for easy viewing

The Erlab Research and Development laboratory

About Erlab

Since 1968, **Erlab** has been a specialist, inventor and world leader in **ductless, zero-emission filtering fume hoods for laboratories** to provide total safety in chemical handling.

1 Erlab filtration

We provide technologies to protect laboratory staff from inhaling chemicals. This is made possible thanks to our Research and Development (R&D) department, which has continuously improved our filtration technology for more than 50 years. That's why, in 2009, we invented the ERLAB ABOVE label for tried and tested filtration technology.

2 The AFNOR NF X 15-211: 2009 standard

Erlab's filtration technology conforms to the NF X 15-211: 2009 standard, the industry's most demanding standard for molecular filtration, developed by a committee of independent scientists and specialized manufacturers.

This text imposes performance criteria linked to:

- Filtration efficiency
- Containment efficiency
- Air face velocity
- Documentation: chemical listing

3 The ESP program

A set of three services included with the purchase of each device designed to ensure your safety.

eValiQuest Risk analysis – Determination of protection needs – Determination of ergonomic needs.

ValiPass Certified installation – Total safety for handling.

ValiGuard Ongoing monitoring – Preventative and maintenance inspections – Device reconfiguration based on protection needs – Development of handling.

4 Flex technology

The combination of molecular and particulate filtration technologies allows a single device to meet laboratories' protection needs. This innovation from Erlab's R&D department offers unprecedented flexibility, versatility and value. A single device can be reconfigured over time and easily reassigned to other applications.

5 Smart technology

Smart technology is a simple and innovative means of communication that improves safety. This technology uses a light and sound signal to indicate the user's level of protection. The advantages of the technology are:

1/ Light pulsation: Real-time communication via LED light pulses intuitively alerts the user to the device's operating status.

2/ Simplicity: One-touch activation.

3/ Detection system: The exclusive detection system continuously monitors filtration performance.

4/ Built-in monitoring: This service provides direct access to the status, settings and history of your device.

Captair 714_V02_05_2025_EN- Erlab USA - Technical data are not contractual. Erlab® DFS SAS reserves the right to modify the present document without prior notice.

avantor ScienceCentral™

avantorsciences.com

Any prices, product, and/or services details are current when published and subject to change. Offers subject to product availability. Void where prohibited by law or company policy. Any claims concerning products manufactured by third parties are the sole claims of the manufacturer and not those of Avantor or its affiliates. All products are subject to the terms and conditions of sale of Avantor or its affiliates, including the applicable limitations of liability contained therein. The information herein should not be considered a warranty of any kind. Please carefully review any product information sheets and safety information for the product. Trademarks are owned by Avantor, Inc. or its affiliates, unless otherwise noted. | Visit **vwr.com avantorsciences.com** to view our privacy policy and additional disclaimers. © 2025 Avantor, Inc. All rights reserved.

0925 Lit. No. 050150W