Instruction manual

VWR® Pipette Controller

NA cat. no 76778-980 EU cat. no 612-7179

Version 01 Issue 06/2023

Legal address of Manufacturer

Europe

VWR International bv,
Researchpark Haasrode 2020
Geldenaaksebaan 464 B-
3001 Leuven
+3216385011
be.vwr.com

UK Importer:
VWR International Ltd
Hunter Boulevard, Magna Park
Lutterworth, Leicestershire, LE17 4XN
uk.vwr.com

United States

VWR International LLC
100 Matsonford Rd
Radnor, PA 19087
+1 800-932-5000
www.vwr.com

Country of Origin

China

Table of Contents

1. Warning 4

2.Package Contents 4

3. Installation 5

4. Product Specifications 6

5. Maintenance 8

6. Storage 9

7. Troubleshooting 9

8. User replaceable accessories 9

9. Technical Service 10

10. Warranty 10

11. Compliance with local laws and regulations 10

12. Equipment disposal 11

13. Appendix 12

Warning

- Never use with fuming liquids which are incompatible with silicone or polyproplyene.
- Never use with highly flammable liquids.
- Observe the reagent manufacturer's safety information.
- Never use the instrument in an atmosphere with danger of explosion.
- When not in use store on bench stand. Never use force when in use.
- Only recharge with manufacturer's original charger. All repairs must be carried out by an authorized dealer.
- Only use the manufacturer's accessories and spare parts。
- Charger must only be used indoors and protected against moisture.
- Please ensure that no liquid enters the instrument.
- The VWR® Pipette Controller should never be used without the filter.
- The filter also prevents liquid from entering the instrument.
- Where liquid has entered the filter please clean and/or replace filter.

Package Contents

Description	Quantity(NA package)	Quantity(EU package)
Pipette Controller	1	1
EU AC-adapter (EU/UK)	/	2
NA AC-adapter	1	/
0.45μm hydrophobic filter	1	1
0.22μm hydrophobic filter	1	1
User Manual	1	1
Short Manual	1	1
Calibration certificate	1	1
Bench Stand	1	1
Nose Cone	3	3

If you are missing any of the above items, please contact our service representative.

Installation

Please follow below picture to install the Nose Cone:

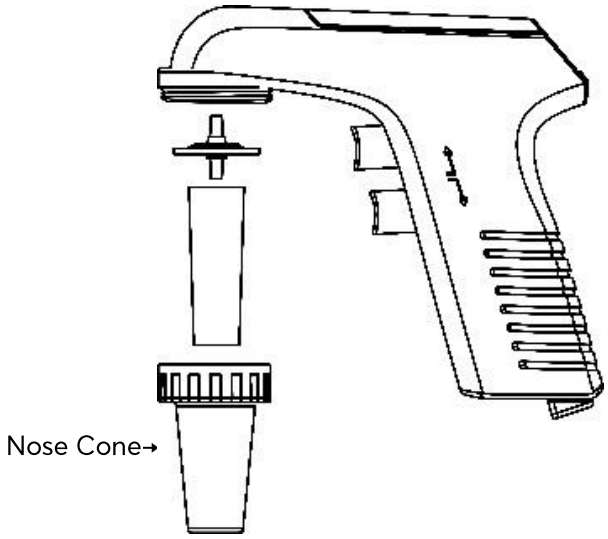

- Before connecting the AC-adapter to the electrical outlet, check that its voltage setting corresponding to the voltage of your electrical outlet.
- Connect the AC-adapter to the electrical outlet
- and to the electrical fitting at the base of the handle of the Pipette Controller

Note: The Pipette Controller should only be charged with the AC-adapter provided.

An icon on the LCD display indicates the level of battery charge - the more bars, the greater the charge.

Product Specifications

Battery: 3.7 V, 2000mA, rechargeable lithium-ion battery
AC-adapter: Input AC 100-240V
Output voltage: 4.2V, 500mA

Overview

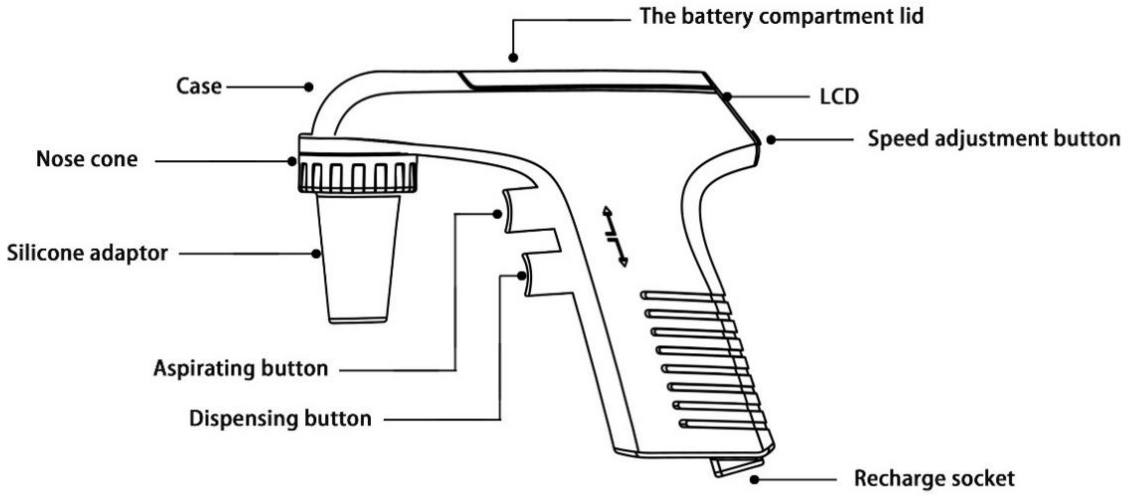

Operational keys

Operating buttons

The Pipette Controller has two operating buttons located at the front of the handle. The upper button enables aspiration for as long as the button is held down. The lower button allows for dispensing. The aspiration and dispensing speeds can be fine-tuned during operation by applying varying finger pressure on the operating buttons.

Speed adjustment button

The speed adjustment button is located at the upper part of the handle. The desired speed is set by pushing the speed adjustment button.

Nose cone and silicone adaptor

The pipet adapter provided with the Pipette Controller allows the use of all standard plastic and glass pipets (graduated and non-graduated) including Pasteur pipets. The pipet adapter of the Pipette Controller consists of the nose cone and silicone adapter. The silicon adapter enables a pipet to fit securely in place, thus creating a proper vacuum level and prevents leakage.

Filters

Removing the nose cone and silicone adaptor exposes a hydrophobic filter (0.45 um), located at the top of the nose piece. The filter protects the Pipette Controller from accidental over-aspiration. It is strongly recommended to use only the original filters supplied by the manufacturer with the Pipette Controller.

Note: the Pipette Controller cannot be operated without a filter. Wetting of filter due to overfilling will slow or prevent fluid movement. If overfilling occurs, change the filter immediately.

Getting Started

Setting the operating speed

The button located under the digital display at the upper part of the handle, allows you to set your aspiration and dispensing speeds . Eight speeds are available for each function. Simply push"△" for faster and "▽" for slower speeds. Your selection will be displayed on the LCD screen.

The Pipette Controller can self-regulate the aspiration and dispensing speeds by circuit feedback.

Note: The aspiration and dispensing speeds can be fine-tuned during operation by applying a varying amount of finger pressure to the operating buttons.

Inserting a serological pipet

Gently push a serological pipet into the silicone adapter and ensure that it fits securely. To insert the serological pipet safely, hold the Pipette Controller firmly by the nose cone and the serological pipet from the top end of the tube.

Aspiration

- Select a speed and fill the pipet by pressing the aspirating button. Fill the pipet just above the desired level, check level by the meniscus.
- Remove the serological pipet from the sample.
- Adjust the volume of the sample by pressing the dispensing button until the meniscus is at the required level.

Dispensing

The Pipette Controller offers two different dispensing modes:

- If the dispensing button is pressed only partially to a point where a check can be felt, the dispensing function will be based on the force of gravity and the liquid will simply flow out.
- Pressing the dispensing button further in will engage the motor and activates the blow-out function.

Note: Finger pressure can be varied to fine-tune the speed within each mode.

Other pipetting recommendations

- Use the instrument within the limits of its chemical resistance.
- Never use with highly flammable liquids.
- Observe the reagent manufacturer's safety information.
- Never use the instrument in an atmosphere with a danger of explosion.
- Never use force with the Pipette Controller.
- Should the instrument fail to function properly, stop pipetting and check the Trouble Shooting section.

Maintenance

The Pipette Controller has been designed for easy in-house maintenance.

Decontamination

To decontaminate, lightly spray the outside of the Pipette Controller with the decontamination spray and wipe dry with a clean cloth.

Changing the nose cone, silicone adapter and filter (Fig. 4)

To change the nose cone, silicone adapter and filter firmly hold the nose cone by the ribbed collar, rotate the nose cone counter-clockwise until completely loosen and pull out the nose cone and the silicone adapter. The filter can be removed by simply pulling it out once the nose cone and the silicone adapter have been disengaged. Position the new filter with the colored side downwards. To reassemble, insert the adapter and nose cone and twist the nose cone gently clockwise.

Note: It is recommended to checkand clean the silicone adapter every six months, or when necessary, to prevent a loss of vacuum. If there is a loss of vacuum, please contact the manufacturer or your local distributor.

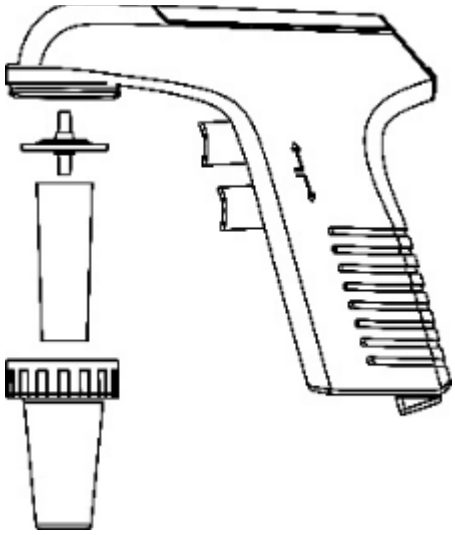

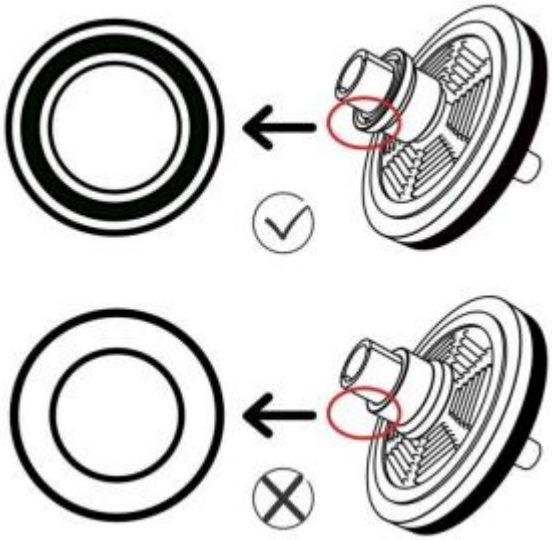

The Pipette Controller cannot be operated without a filter. Wetting of filter due to overfilling will slow or prevent fluid movement. If overfilling occurs, change the filter immediately. Only use filters supplied by the manufacturer.

Storage

The Pipette Controller should not be stored for a long period of time without removing the serological pipet. It is recommended to disconnect the Pipette Controller from the AC-adapter if the unit is not used for a lengthy period of time.

Trouble Shooting

Review the information in the table below to troubleshoot operating problems.

Problem	Cause	Solution
Reduced aspiration capacity or the Pipette Controller is blocked	- Filter blocked, dirty or damaged -Battery low	-Replace the filter -Recharge
Serological pipet drips	-Serological pipet not securely attached -Silicone adapter or nose cone loose -Silicone adapter or nose cone damaged	-Reattach serological pipet -Reassemble silicone adapter or nose cone -Replace silicone adapter or nose cone
Reduced operating time	-Battery worn	-Replace battery
No display	-Low battery, screen off threshold protection -Dead battery -Battery plugged in the wrong orientation -Failure of the Printed Circuit Board	- When the battery level is as shown in the figure, it needs to be charged immediately to avoid affecting the experiment 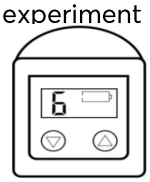 -Replace battery -Refer to section 6.3 of manual to plug battery in correctly. -Call the manufacturer Tech Support

User replaceable accessories (Need purchase separately)

Description	Quantity	EU Cat. No.	NA cat. no
VWR 0.45µm Hydrophobic filter set	5pcs/pack	612-7181	76778-974
VWR 0.22µm Hydrophobic filter set	5pcs/pack	612-7182	76778-976
VWR Nose Cone set	4pcs/pack	612-7180	76778-978
VWR Triangle shape stand	1 pc/pack	612-7183	76778-972

Technical service

Web Resources

Visit the VWR website at **www.vwr.com** for:

- Complete technical service contact information
- Access to the VWR Online Catalogue, and information about accessories and related products
- Additional product information and special offers

Contact us For information or technical assistance contact your local VWR representative or visit. www.vwr.com.

Warranty

VWR warrants that this product will be free from defects in material and workmanship for a period of three (3) years from date of delivery. (Battery is warranted for three months only).If a defect is present, VWR will, at its option and cost, repair, replace, or refund the purchase price of this product to the customer, provided it is returned during the warranty period. This warranty does not apply if the product has been damaged by accident, abuse, misuse, or misapplication, or from ordinary wear and tear. If the required maintenance and inspection services are not performed according to the manuals and any local regulations, such warranty turns invalid, except to the extent, the defect of the product is not due to such non-performance.

Items being returned must be insured by the customer against possible damage or loss. This warranty shall be limited to the aforementioned remedies. IT IS EXPRESSLY AGREED THAT THIS WARRANTY WILL BE IN LIEU OF ALL WARRANTIES OF FITNESS AND IN LIEU OF THE WARRANTY OF MERCHANTABILITY.

Compliance with local laws and regulations

The customer is responsible for applying for and obtaining the necessary regulatory approvals or other authorisations necessary to run or use the Product in its local environment. VWR will not be held liable for any related omission or for not obtaining the required approval or authorisation, unless any refusal is due to a defect of the product.

Equipment disposal

This equipment is marked with the crossed out wheeled bin symbol to indicate that this equipment must not be disposed of with unsorted waste.

Instead it's your responsibility to correctly dispose of your equipment at lifecycle -end by handling it over to an authorized facility for separate collection and recycling. It's also your responsibility to decontaminate the equipment in case of biological, chemical and/or radiological contamination, so as to protect from health hazards the persons involved in the disposal and recycling of the equipment.

For more information about where you can drop off your waste of equipment, please contact your local dealer from whom you originally purchased this equipment.

By doing so, you will help to conserve natural and environmental resources and you will ensure that your equipment is recycled in a manner that protects human health.

Thank you

Our local offices in Europe, AMEA and North America

Austria
VWR International GmbH
Graumanngasse 7
1150 Vienna
Tel.: +43 1 97 002 0
Email: info.at@vwr.com

Belgium
VWR International BV
Researchpark Haasrode 2020
Geldenaaksebaan 464
3001 Leuven
Tel.: +32 016 385 011
Email: vwr.be@vwr.com

Canada
VWR International
2360 Argentia Road
Mississauga, Ontario L5N 5Z7
Tel.: +1 800 932 5000
Email: Canada_Orders@vwr.com

China
VWR (Shanghai) Co., Ltd
Bld.No.1, No.3728 Jinke Rd,
Pudong New District
Shanghai, 201203- China
Tel.: +400 821 8006
Email: info_china@vwr.com

Czech Republic
VWR International s. r. o.
Veetee Business Park
Pražská 442
CZ - 281 67 Stríbrná Skalice
Tel.: +420 321 570 321
Email: info.cz@vwr.com

Denmark
VWR International A/S
Tobaksvejen 21
2860 Søborg
Tel.: +45 43 86 87 88
Email: info.dk@vwr.com

Finland
VWR International Oy
Valimotie 17-19
00380 Helsinki
Tel.: +358 9 80 45 51
Email: info.fi@vwr.com

France
VWR International S.A.S.
Immeuble Estréo
1-3 rue d'Aurion
93114 Rosny-sous-Bois cedex
Tel.: 0 825 02 30 30* (national)
Tel.: +33 (0) 1 45 14 85 00 (international)
Email: info.fr@vwr.com
* 0,18 € TTC/ min + prix appel

Germany
VWR International GmbH
Hilpertstrasse 20a
D - 64295 Darmstadt
Freecall: 0800 702 00 07
Tel.: +49 (0) 6151 3972 0 (international)
Email: info.de@vwr.com

Hungary
VWR International Kft.
Simon László u. 4.
4034 Debrecen
Tel.: +36 (52) 521-130
Email: info.hu@vwr.com

India
VWR Lab Products Private Limited
No.139. BDA Industrial Suburb,
6th Main, Tumkur Road,
Peenya Post,
Bangalore, India – 560058
Tel.: +91-80-28078400
Email: vwr_india@vwr.com

Ireland
VWR International Ltd
Orion Business Campus
Northwest Business Park
Ballycoolin
Dublin 15
Tel.: +353 01 88 22 222
Email sales.ie@vwr.com

Italy
VWR International S.r.l.
Via San Giusto 85
20153 Milano (MI)
Tel.: +39 02-3320311/02-487791
Email: info.it@vwr.com

Korea
Avantor Performance Materials Korea Ltd
2F ACE Gwanggyo Tower I
Daehak 4ro 17
Yeongtong-gu Suwon
Korea 16226
Tel.: +82 31 645 7250
saleskorea@avantorsciences.com

Mexico
VWR International, S.de R.L. de C.V.
Km. 14.5 Carretera
Tlalnepantla-Cuautitlán
Col. Lechería
Tultitlán Edo. de México
CP 54940
Tel.: +52 (55) 5005 0100
vwrmx@vwr.com

Middle East & Africa
VWR International FZ-LLC
DSP Laboratory Complex
125, Floor 01
Dubai, United Arab Emirates
Tel.: +971 4 5573271
info.mea@vwr.com

The Netherlands
VWR International B.V.
Postbus 8198
1005 AD Amsterdam
Tel.: +31 020 4808 400
Email: info.nl@vwr.com

Norway
VWR International AS
Brynsalleen 4
0667 Oslo
Tel.: +47 22 90 00 00
Email: info.no@vwr.com

Poland
VWR International Sp. z o.o.
Limbowa 5
80-175 Gdansk
Tel.: +48 058 32 38 210
Email: info.pl@vwr.com

Portugal
VWR International - Material de Laboratório, Lda
Centro Empresarial de Alfragide
Rua da Indústria, n° 6
2610-088 Amadora
Tel.: +351 21 3600 770
Email: info.pt@vwr.com

Singapore
VWR Singapore Pte Ltd
18 Gul Drive
Singapore 629468
Tel: +65 6505 0760
Email: sales.sg@vwr.com

Spain
VWR International Eurolab S.L.
C/ Tecnología 5-17
A-7 Llinars Park
08450 - Llinars del Vallès
Barcelona
Tel.: +34 902 222 897
Email: info.es@vwr.com

Sweden
VWR International AB
Fagerstagatan 18b
163 94 Stockholm
Tel.: +46 08 621 34 20
Email: info.se@vwr.com

Switzerland
VWR International GmbH
Lerzenstrasse 16/18
8953 Dietikon
Tel.: +41 044 745 13 13
Email: info.ch@vwr.com

UK
VWR International Ltd
Customer Service Centre
Hunter Boulevard
Magna Park
Lutterworth
Leicestershire
LE17 4XN
Tel.: +44 (0) 800 22 33 44
Email: uksales@vwr.com

United States
VWR International, LLC
100 Matsonford Road
Building One Suite 200
Radnor, PA 19087
Tel.: +1 800 932 5000
vwrcustomerService@vwr.com