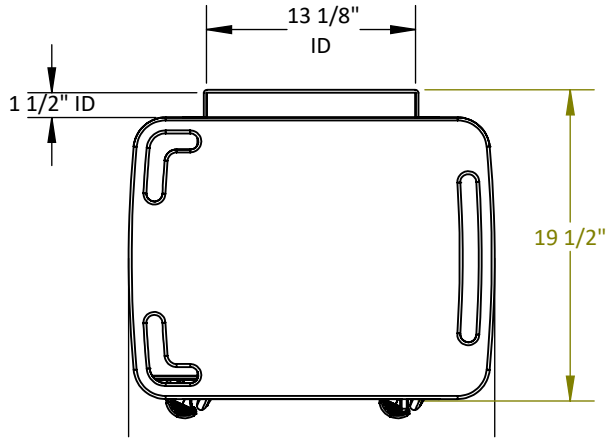


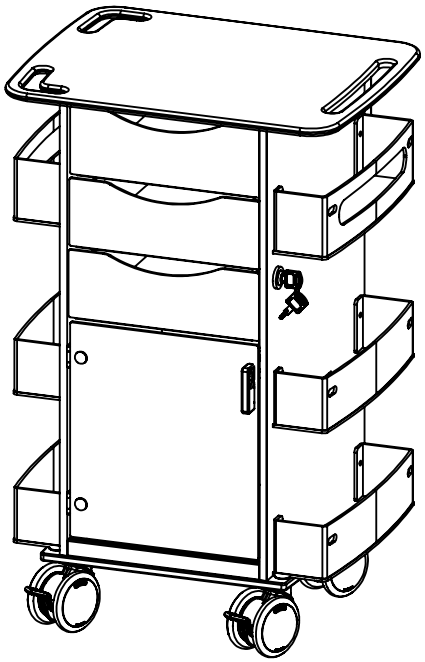

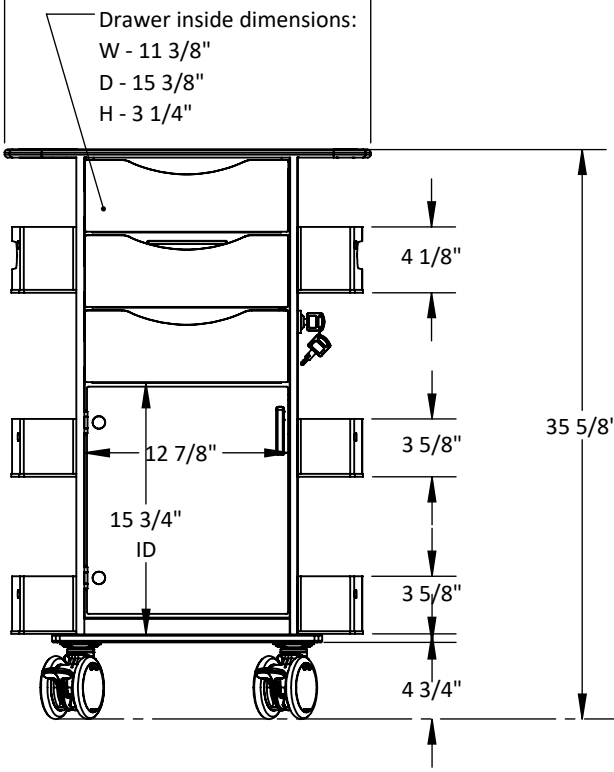


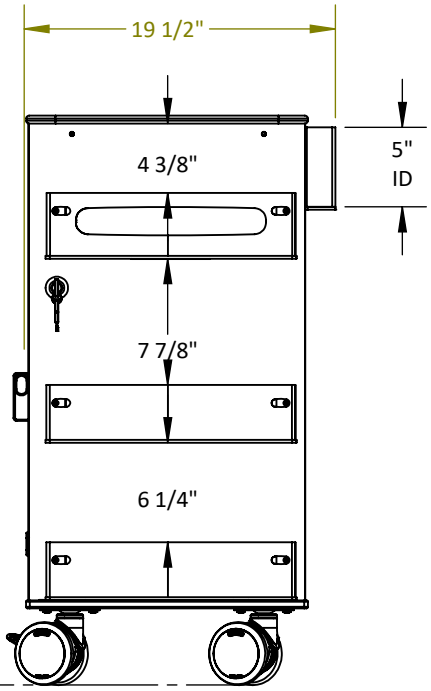


| | | | | | |
|---|---|---|---|---|---|
| | | DIMENSIONS ARE IN INCHES<br>TOLERANCES:<br>FRACTIONAL ± 1/8"<br>ANGULAR: MACH ± BEND ±<br>TWO PLACE DECIMAL ±<br>THREE PLACE DECIMAL ±<br>Outside dimensions rounded up to nearest 1/8"; inside dimensions rounded down to nearest 1/8" | | NAME | DATE |
| | | | DRAWN | JH | 12/01/20 |
| | | | CHECKED | | |
| | | | ENG APPR. | | |
| | | | MFG APPR. | | |
| | | MATERIAL<br>HDPE, ABS, ACRYLIC | Q.A. | | |
| NEXT ASSY | USED ON | FINISH<br>Smooth, no rough edges | COMMENTS: | | |
| APPLICATION | | DO NOT SCALE DRAWING | | | |

**PROPRIETARY AND CONFIDENTIAL**

THE INFORMATION CONTAINED IN THIS DRAWING IS THE SOLE PROPERTY OF TRIPPNT. ANY REPRODUCTION IN PART OR AS A WHOLE WITHOUT THE WRITTEN PERMISSION OF TRIPPNT IS PROHIBITED.

TrippNT

This document and the information contained therein are the property of TRIPPNT, Kansas City, Missouri. Recipient agrees NOT TO: (1) Use such information for purposes other than those expressly authorized by TRIPPNT. (2) Furnish such information to any other person in whole or in part for any purpose whatsoever without express written permission of TRIPPNT. (3) Reproduce or copy this document either in whole or in partwithout the express written permission of TRIPPNT.

| SIZE | DWG. NO. | REV. |
|---|---|---|
| A | 20 - 53517.1 | 0 |
| | Weight: 65 lbs. | SHEET 1 OF 1 |